OptoSupply
Light It Up

3.5x2.8x1.9mm Red & White SMD LED

OSRWY4S2C1A

■Features

- High Luminous PLCC4 Top SMD LEDs
- 3.5x2.8x1.9mm Standard Directivity
- Superior Weather-resistance
- UV Resistant Epoxy
- Water Clear Type

■Applications

- Toys
- Audio
- Games
- Other Lighting

■Outline Dimension

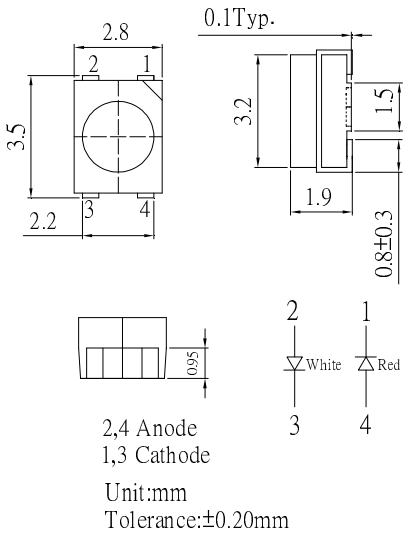

■Absolute Maximum Rating (Ta=25℃)

Item	Symbol	Value		Unit
		Red	White	
DC Forward Current	I_F	30	30	mA
Pulse Forward Current*	I_{FP}	100	100	mA
Reverse Voltage	V_R	5	5	V
Power Dissipation	P_D	78	78	mW
Operating Temperature	Topr	-30 ~ +85		℃
Storage Temperature	Tstg	-40~ +100		℃
Lead Soldering Temperature	Tsol	260℃/5sec		-

*Pulse width Max.10ms Duty ratio max 1/10

■Directivity

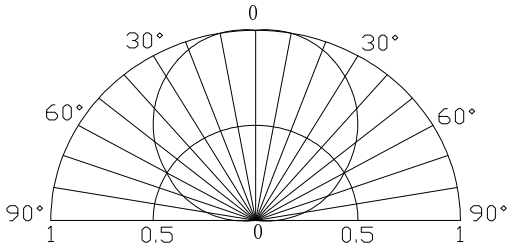

■Electrical -Optical Characteristics (Ta=25℃)

Item	Symbol	Condition	Min.	Typ.	Max.	Unit
DC Forward Voltage	V_F (Red)	I_F=20mA	1.8	2.1	2.6	V
	V_F (W)	I_F=20mA	2.9	3.1	3.6	V
DC Reverse Current	I_R	V_R=5V	-	-	10	μA
Domi. Wavelength*	λ_D(Red)	I_F=20mA	620	625	630	nm
	CCT(W)	I_F=20mA	10000K			-
Luminous Intensity*	I_V(Red)	I_F=20mA	200	300	-	mcd
	I_V(W)	I_F=20mA	300	500	-	mcd
50% Power Angle	$2\theta_{1/2}$	I_F=20mA	-	120	-	deg

*1 Tolerance of dominant wavelength is ±1nm
*2 Tolerance of luminous intensity is ±15%

LED & Application Technologies