OptoSupply
Light It Up

3mm Round Red & Warm White LED

OSRMJ23131A

■Features

- High Luminous LEDs
- 3mm Round Standard Directivity
- Long Lifetime Operation
- Superior Weather-resistance
- UV Resistant Epoxy/ Water Clear Type
- Bi-Color AC LED

■Applications

- Toys
- Audio
- Games
- Other Lighting

■Outline Dimension

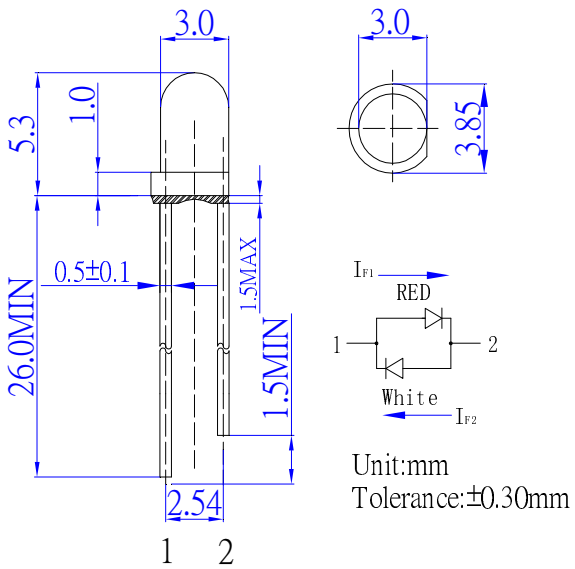

■Absolute Maximum Rating (Ta=25℃)

Item	Symbol	Value		Unit
		Red	Warm White	
DC Forward Current	I_F	30	30	mA
Pulse Forward Current*	I_{FP}	100	100	mA
Reverse Voltage	V_R	5	5	V
Power Dissipation	P_D	78	108	mW
Operating Temperature	Topr	-30 ~ +85		℃
Storage Temperature	Tstg	-40~ +100		℃
Lead Soldering Temperature	Tsol	260℃/5sec		-

*Pulse width Max.10ms Duty ratio max 1/10

■Directivity

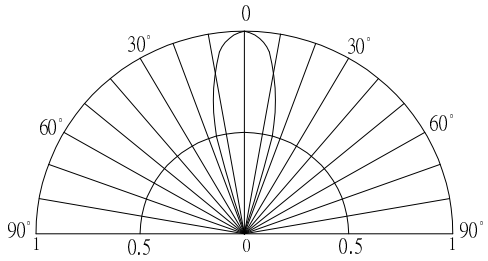

■Electrical -Optical Characteristics (Ta=25℃)

Item	NO.	Symbol	Condition	Min.	Typ.	Max.	Unit
DC Forward Voltage	RED	V_{F1}	I_{F1}=20mA	1.8	2.1	2.6	V
	White	V_{F2}	I_{F2}=20mA	2.9	3.1	3.6	V
Domi. Wavelength*	RED	λ_{D1}	I_{F1}=20mA	620	625	630	nm
	White	CCT	I_{F2}=20mA	3000K			-
Luminous Intensity*	RED	I_{V1}	I_{F1}=20mA	220	330	-	mcd
	White	I_{V2}	I_{F2}=20mA	750	1120	-	mcd
50% Power Angle	RED	$2\theta_{1/2}$	I_{F1}=20mA	-	30	-	deg
	White	$2\theta_{1/2}$	I_{F2}=20mA	-	30	-	deg

*Tolerance of dominant chromaticity is ±10%
*2 Tolerance of luminous intensity is ±15%